Electric switchboard AE-BU15MW

Contents

1. Technical Report …… sheet TR 1-4
2. Electrical Diagram …. sheet 1-17

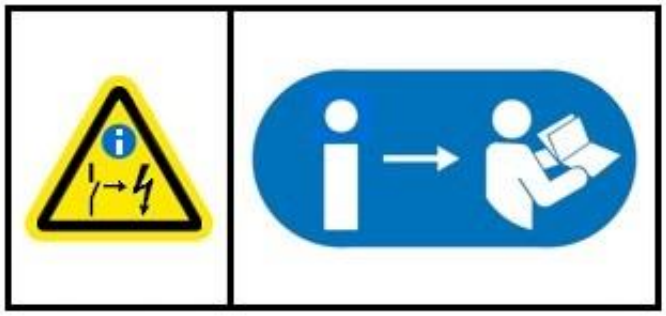

	DANGER
	RISK OF ELECTRIC SHOCK! Certain machine electrical components still remain live when the main switch is turned to 'OFF' off. These are: • Incoming electrical supply terminal block components, up to the main switch • Heating function components • Externally supplied interface signals The corresponding circuits use orange-coloured wires. For detailed information refer to the electrical schematics. Before working on these components, you must make sure the associated voltage supplies are switched off (for example. lockout / tagout (LOTO) procedure of the corresponding supply by the customer.

SAFETY REGULATIONS

During controller operation certain items are under dangerous voltage! Non-observance of safety instructions can result in death, serious injuries or material damage.
Only specialist personnel may carry out transport, installation and commissioning work.
The applicable valid standards as well as the national and / or company-specific accident prevention regulations are to observed.

The following safety instructions are to be observed:
The installation, commissioning, troubleshooting as well as repair of the controller may only be carried out by qualified personnel that is familiar with the corresponding operating instructions.
Device connection and installation has to follow all the valid standards, state and local regulations. Proper grounding and conductor dimensioning as well as proper short-circuit proofing have to be ensured. These measures serve to ensure the safety of the plant and of the operating personnel.
Before carrying out safety checks, maintenance work and repair measures ensure that all the power supplies are switched off, are secured against being switched on unintentionally and are marked correspondingly.
Only test devices that are in technically perfect condition and are suitable for the respective measurement may be used to carry out measurements!
The instructions specified in the respective operating instructions are to be followed strictly! It is mandatory that hazard, warning and safety instructions are followed!
All doors and covers are to be kept closed during the controller operation. If cooling devices are installed in the controller, ensure that these systems operate trouble-free. These include the regular cleaning of the filters, in as far as they exist.

Technical Report

Electric switchboard AE-BU15MW

1. General

AE-BU15MW is an indoor, metal sheet cabinet designed for control and powering of the blower unit and complies with EN 60204-1 and EN 61439-1. The cabinet is totally enclosed and has following dimensions: 1400x600x400mm (HxWxL)

The switchboard consists of electric components, which ensure starting, running and safe operation of 15 kW / 380-415 V +/-10% 50/60 Hz blower package. The switchboard is secured against short circuit by main switch/circuit breaker – 3F1. Start and blower speed control is controlled by frequency converter (FC) -4G2. Its protection circuits protect the blower motor from over-current. Blower cabinet fan motors -3M4 and -3M6 are powered by 230 VAC, 50/60 Hz isolation transformer -3T5. Its primary winding is protected by circuit breaker -3Q3. Blower fan -3M4 is protected by circuit breaker -3Q5, switchboard fan –3M6 is protected by circuit breaker -3Q6 and started by auxiliary relay -6K1. Power supply -3U6 powers AECon controller -3A8 with 24 VDC. Its primary wiring is protected by circuit breaker -3Q4, control circuits are protected by circuit breaker -3Q7. AECon controller -3A8, EMERGENCY STOP button -5S7 and control handle of the main switch/circuit breaker are located on the switchboard door.

The electric switchboard shall be connected to the main power supply by WL01 cable in size 4x6mm^2. The blower motor is connected by shielded cable WL02 YSLCY 4x6 mm^2. Fan motor –3M4 is connected by WL03 YSLY-JZ 3x1 cable. Pressure sensor –5B1 is connected by WS02 PUR 4x0,34 cable. Remote control 0-10V should by connected WS04 LIYCY 2x0,5 cable. Air temperature sensor –5B3 is connected by WS05 SIHF 2x0,34 cable. Motor thermistor -5B5 is connected by WS06 YSLY-OZ 2x0,75 cable. Cables from and into the switchboard shall be installed from the bottom of the switchboard.

ATTENTION! When working on the device, it is necessary to switch it off from the power supply by setting off the main circuit breaker. There is a voltage on input terminals even when the main switch if switched off.

2. Function description

After switching on the main switch/circuit breaker –3F1 of the control handle, blower is ready to start. Please see the Danfoss frequency converter manual (Annex to the Technical report) to set the drive parameters. Press push START [I] button on the control unit AECon –3A8. The machine will start. Please note, that the Auto and Remote switch is not operational when the machine is running.

It is possible to read current value of the blower charge/discharge pressure on the display AECon –3A8. Please check the AECon manual to read the process values and/or set the control unit parameters.

It is possible to control the blower by remote command through NO contact via terminal connectors –X5:3, -X5:6. The blower speed can be controlled by remote control 0-10V via terminal connectors -X5:21, -X5:22. The current condition of blower is reported via zero-potential contacts -X5:1, -X5:2 - connected (NO) ..... operation, –X5:7, -X5:8 connected (NC) ..... blower in Alarm.

Danfoss drive is monitoring the system pressure, temperature and motor current, as well as other measured values and will stop the machine operation when the error occurs. The errors and warnings are shown on the AECon display. It is possible to put blower into operation after the defect has been eliminated.

3. Basic technical parameters

Rated voltage .....3L+PE AC 380-415V +/-10% 50/60Hz

FLA.....30A

Short circuit resistance.....25kA

El. protection .....IP54, after opening the cover IP20

Protection from dangerous touch.....automatic disconnection from the source

Switchboard dimensions.....1400x600x400mm

Weight – switchboard + control panel 75kg

Design according to..... EN 60204-1 and EN 61439-1

Drawing documentation AR100152

Ambient temperature .....0 to 45°C

Humidity range .....50% at 40°C to 90% at 20°C

Altitude up to 1000m

4. Technical specification

Metal sheet cabinet Rittal AX1091.000, dimensions 1000x600x400mm

Switchboard base with dimensions 600x600x400

Item	Marking	description, type, function, manufacturer	QTY, length (m)
1.	-3A8	AECon controller HMI, ARDAT Systems, language versions EN / DE	1 pc
2.	-3F1	Main switch/circuit breaker, MC132131, 32A, 440V, Schrack	1 pc
3.	-3Q3	Circuit breaker C2A, P1MB2PC02, protects transformer -3T5 from short circuit, Lovato	1 pc
4.	-3Q4	Circuit breaker C1A, P1MB2PC01, protects power supply -3U6 from short circuit, Lovato	1 pc
5.	-3Q5	Circuit breaker C2A, P1MB1PC02, blower fan protection -3M4 from short circuit, Lovato	1 pc
6.	-3Q6	Circuit breaker C2A, P1MB1PC02, switchboard fan protection -3M6, Lovato	1 pc
7.	-3Q7	Circuit breaker C2A, P1MB1PC02, protects control circuits 24VDC, Lovato	1 pc
8.	-3T5	Transformer, LP824040, 400VA, 400/230V, fan supply voltage, Schrack	1 pc
9.	-3U6	Power source, WDR-60-24, 60W, 180-550VAC/24VDC, control voltage, Mean Well	1 pc
10.	-3M6	Fan, SK3239.100, 18,5W, 0,12A, 230V, 50Hz, switchboard cooling, Rittal	1 pc
11.	-4G2	Frequency converter with control panel, FC280P15K, 15kW, 380-480V, Danfoss	1 pc
12.	-5B1	Pressure sensor, HUBA 528, 7-33VDC, measurement of inlet air pressure, Huba, outside of switchboard	1 pc

13.	-5B3	Temperature sensor, TSB 060, NC 140°C, measurement of outlet air temp, Sensit, outside of switchboard	1 pc
14.	-5S7	Controller head PPFN1R4N, NC unit PL004001, EMERGENCY STOP, Giovenzana	1 pc
15.	-6K1	Relay, RS500024, 24VDC, 6A + socket, auxiliary relay for control circuits, Schrack	1 pc
14.	-6K2	Relay, RXT21LC4, 24VDC, 5A + socket, auxiliary relay for control circuits, Schrack	1 pc
15.	-X1	Terminal box, 3x WT10 + 1x WT10 PE, switchboard power supply in, Wieland	1 pc
16.	-X2	Terminal box, 1x WT2,5 + 1x WT2,5 N + 1x WT2,5 PE, output for blower fan supply, Wieland	1 pc
17.	-X3	Terminal EMC, 1x SFZ + 2x SFL, fixing the cable shield, Icotek	1 pc
18.	-X4,-X5	Terminal box, WT 2,5 … 4+10 pcs, external signals, Wieland	1 pc

Cable leading

1.	WL01	CYKY 4x6, supply mains of the blower	not included
2.	WL02	YSLCY 4x6, current supply of mains engine –4M2, Tekaben	5 m
3.	WL03	YSLY-JZ 3x1, current supply of fan engine –3M4, Tekaben	5 m
4.	WS02	PUR 4x0,34, connection pressure sensor -5B1 witch frequency converter -4G2, IFM	5 m
5.	WS04	LIYCY 2x0,5, remote control 0-10V	not included
6.	WS05	SIHF 2x0,34, connection temperature sensor –5B3 witch freq. converter -4G2, Tekaben	5 m
7.	WS06	YSLY-OZ 2x0,75, connection thermistor –5B5 with frequency converter -4G2, Tekaben	5 m
8.	WS07	YSLY-OZ 2x1, external control Start / Stop	not included
9.	WS08	YSLY-OZ 4x1, external signals connected	not included

A	Initial version	10.5.2024	ML	DK
B	6K2 description, b/w version	11.9.2024	ML	DK
INDEX	MODIFICATION	DATE	DESIGNED	CONTROLED

BUSCH	DESIGNED	ML
	CONTROLED	DK
	CREATION DATE	10.5.2024

Type/Typ/Type: AE-BU15MW

Untertype/Subtype/Sous-type: For TYR Blower

Kunde/ Customer/ Client:_____

Pumpen Nr/ Pump No/ Pompe N°:_____

Verkabelung durch/ Cabled by/ Câbleur:_____

Datum/ Date/ Date:_____

DOCUMENT No. :	AR100152	INDEX B	SHEET 1

Schutzvermerk ISO 16016 beachten Se reporter à la clause de protection ISO 16016 Refer to protection notice ISO 16016

Umgebungstemperatur / Ambient temperature / Température ambiente: 0°to 45°C
Feuchtebereich / Humidity range / Humidité relative: 50% at 40°C to 90% at 20°C
Höhe / Altitude / Altitude: up to 1000M

Customer power supply
3L+PE 380-415V +/-10% 50/60Hz
Compatible with networks TN, TT, IT*

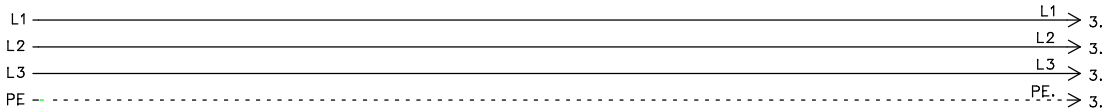

*IT: The frequency inverter settings must be adjusted for the IT network.
Please, contact the manufacturer for more details

Power	Busch Article N°	Frequency inverter typ	Control box size (mm)	FLA (A)	Protection with fuse	Wire gauge input min.	Control box N°	Main switch type
5,5 kW		134U2985-FC280P5K5	600x380x350		C20	2,5mm²	AE-BU5MW	MC120131 (20A)
7,5 kW		134U2986-FC280P7K5	600x380x350		C20	2,5mm²	AE-BU7MW	MC120131 (20A)
11 kW		134U2987-FC280P11K	1400x600x400		C25	4mm²	AE-BU11MW	MC125131 (25A)
15 kW	**2000095584**	**134U2988-FC280P15K**	**1400x600x400**	**30**	**C32**	**6mm²**	**AE-BU15MW**	**MC132131 (32A)**
18,5 kW		134U2989-FC280P18K	1400x600x400		C40	10mm²	AE-BU18MW	MC140131 (40A)
22 kW		134U2990-FC280P22K	1600x600x400		C50	10mm²	AE-BU22MW	MC150131 (50A)
30 kW		131F0433-FC302P22K	1600x600x400		C63	16mm²	AE-BU30FW	MC163131 (63A)
37 kW		131F0435-FC302P30K	1600x600x400		C80	25mm²	AE-BU37FW	MC180131 (80A)
45 kW		131F0436-FC302P37K	1800x800x400		C100	25mm²	AE-BU45FW	MC110131 (100A)
55 kW		131F0439-FC302P45K	1800x800x400		C125	35mm²	AE-BU55FW	MC112131 (125A)
75 kW		131F0440-FC302P55K	1800x800x400		C160	50mm²	AE-BU75FW	MC116131 (160A)
90 kW		131F0446-FC302P75K	1800x800x400		C200	70mm²	AE-BU90FW	MC220131 (200A)

BUSCH

DESIGNED BY: ML
CHECKED: DK
DATE OF CREATION: 10.5.2024

INDEX	DATE	MODIFICATION	DES.
A	10.5.2024	Initial version	ML
B	11.9.2024	6K2 description, b/w ver.	ML

Schaltplan
Electrical schematics
Schéma électriques

DOCUMENT No: AR100152

TYR Blower

Stromkreise des Kunden
Customer power supply
Circuits d'alimentation du client

SHEET 2
1 3

Software SEE V8R1

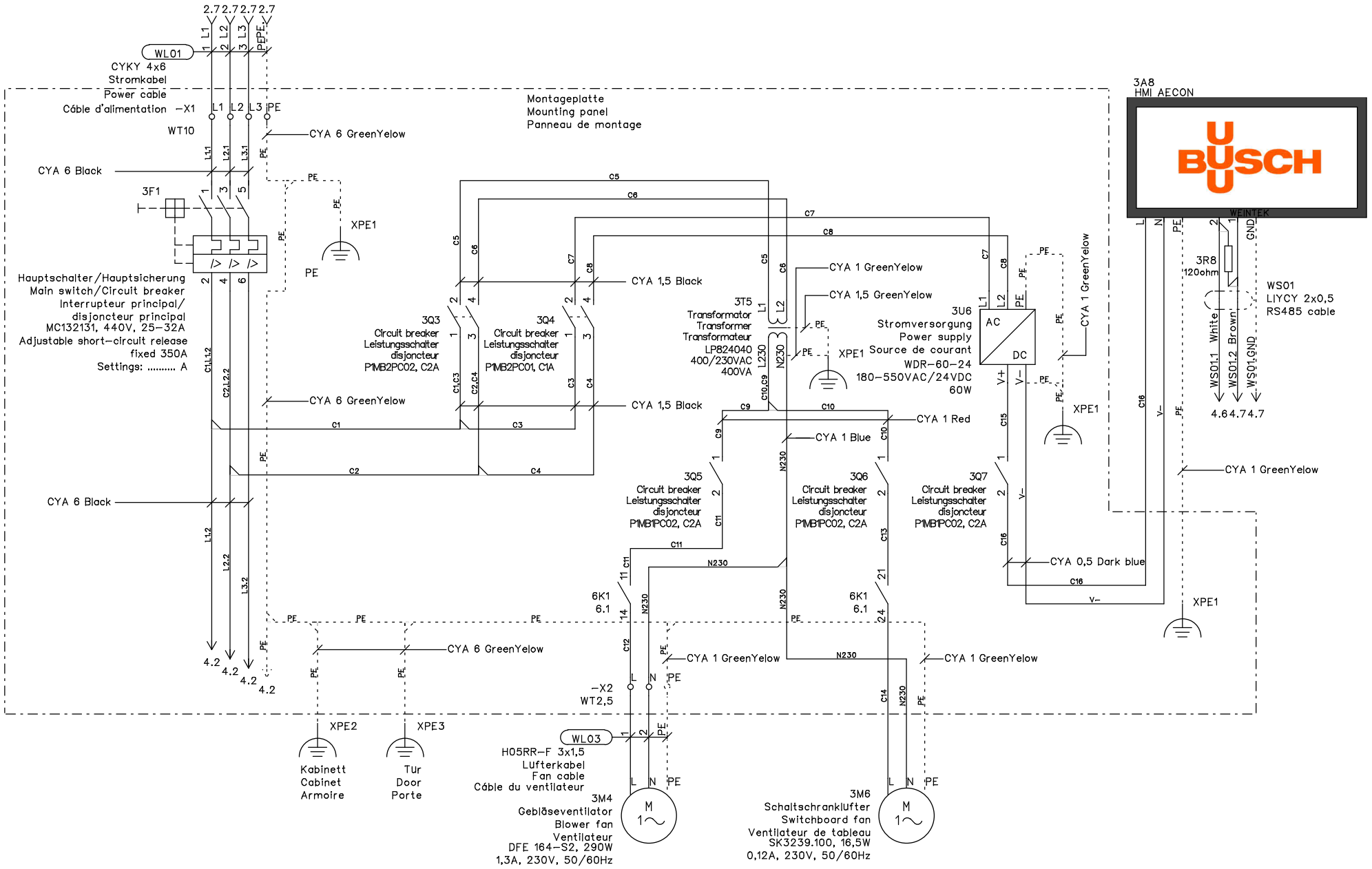

DESIGNED BY:	INDEX	DATE	MODIFICATION	DES.
ML	A	10.5.2024	Initial version	ML
CHECKED:	B	11.9.2024	6K2 description, b/w ver.	ML
DK				
DATE OF CREATION:				
10.5.2024				

Schaltplan
Electrical schematics
Schéma électriques

DOCUMENT No:
AR100152

TYR Blower

Hauptstromkreise
Main circuits
Circuits principaux

SHEET 3 ◀2 4▶

Software SEE V8R1

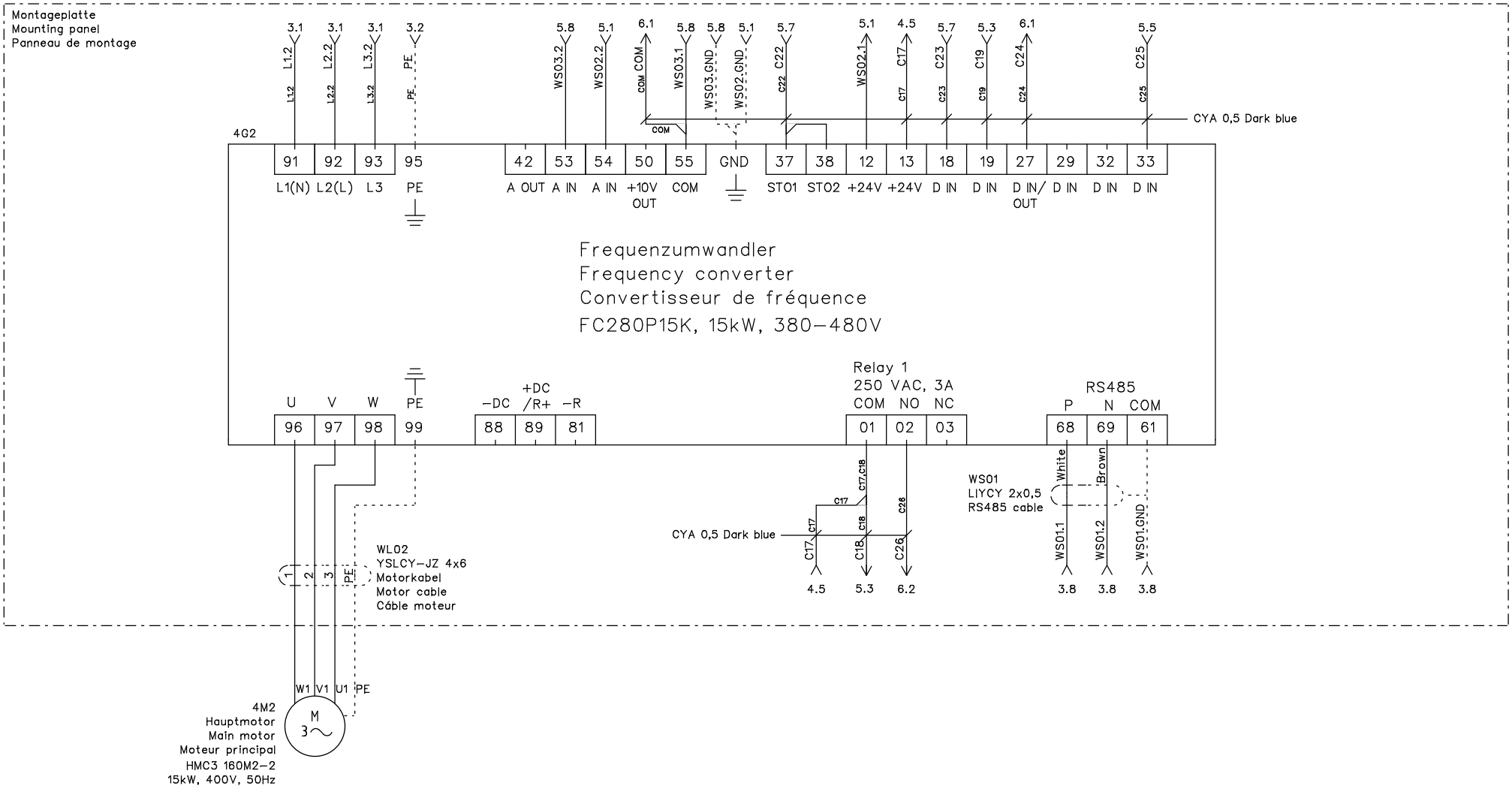

BUSCH	DESIGNED BY: ML	A	10.5.2024	Initial version	ML	Schaltplan Electrical schematics Schéma électriques	TYR Blower Frequenzumwandler Frequency converter Convertisseur de fréquence
	CHECKED: DK	B	11.9.2024	6K2 description, b/w ver.	ML		SHEET 4 ◀3 5▶
	DATE OF CREATION: 10.5.2024	INDEX	DATE	MODIFICATION	DES.	DOCUMENT No: AR100152	Software SEE V8R1

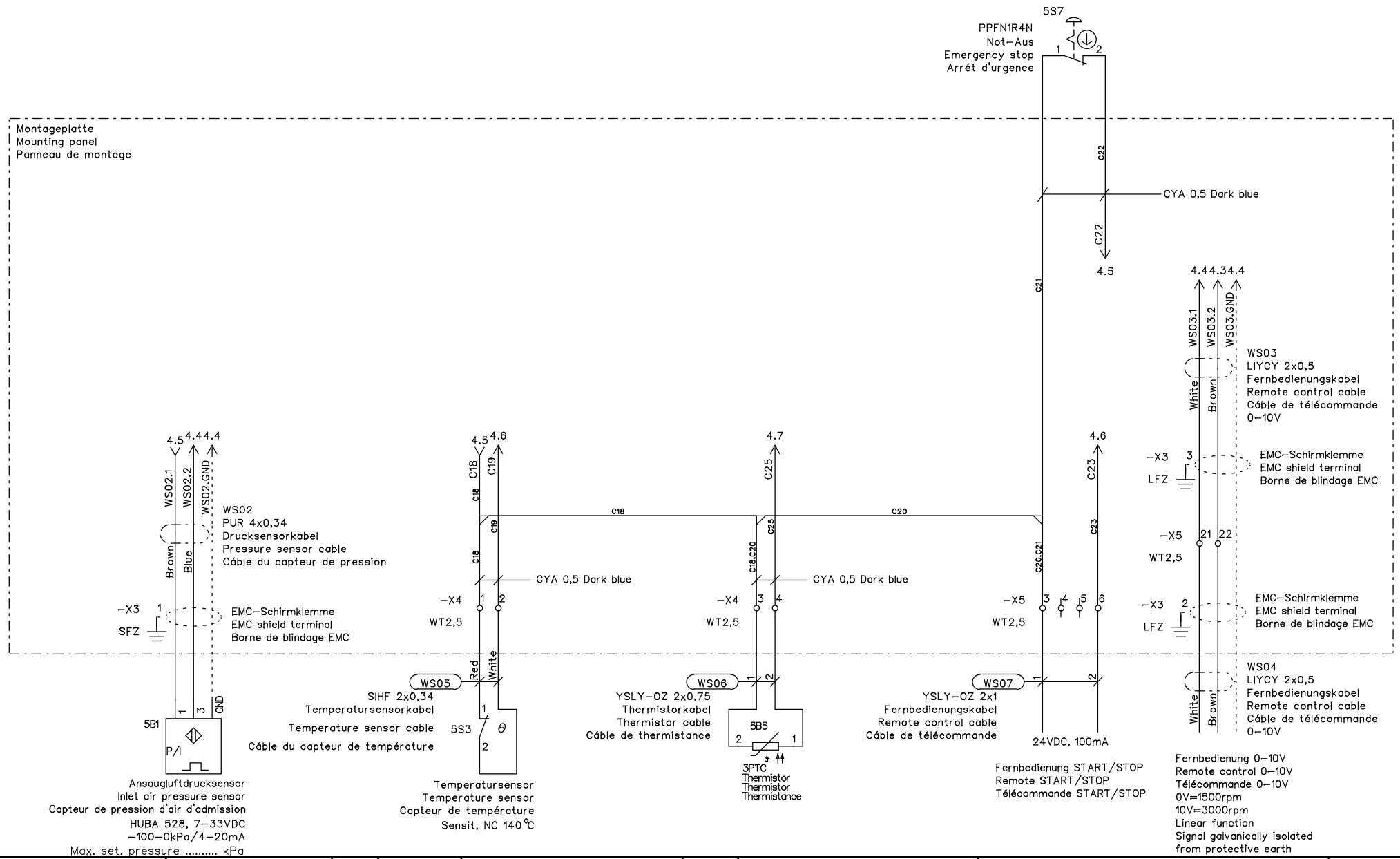

DESIGNED BY:	INDEX	DATE	MODIFICATION	DES.
ML	A	10.5.2024	Initial version	ML
CHECKED:	B	11.9.2024	6K2 description, b/w ver.	ML
DK				
DATE OF CREATION:				
10.5.2024				

Schaltplan
Electrical schematics
Schéma électriques

DOCUMENT No:
AR100152

TYR Blower

Analoge und digitale Eingänge
Analog and digital inputs
Entrées analogiques et numériques

SHEET 5 ◀4 6▶

Software SEE V8R1

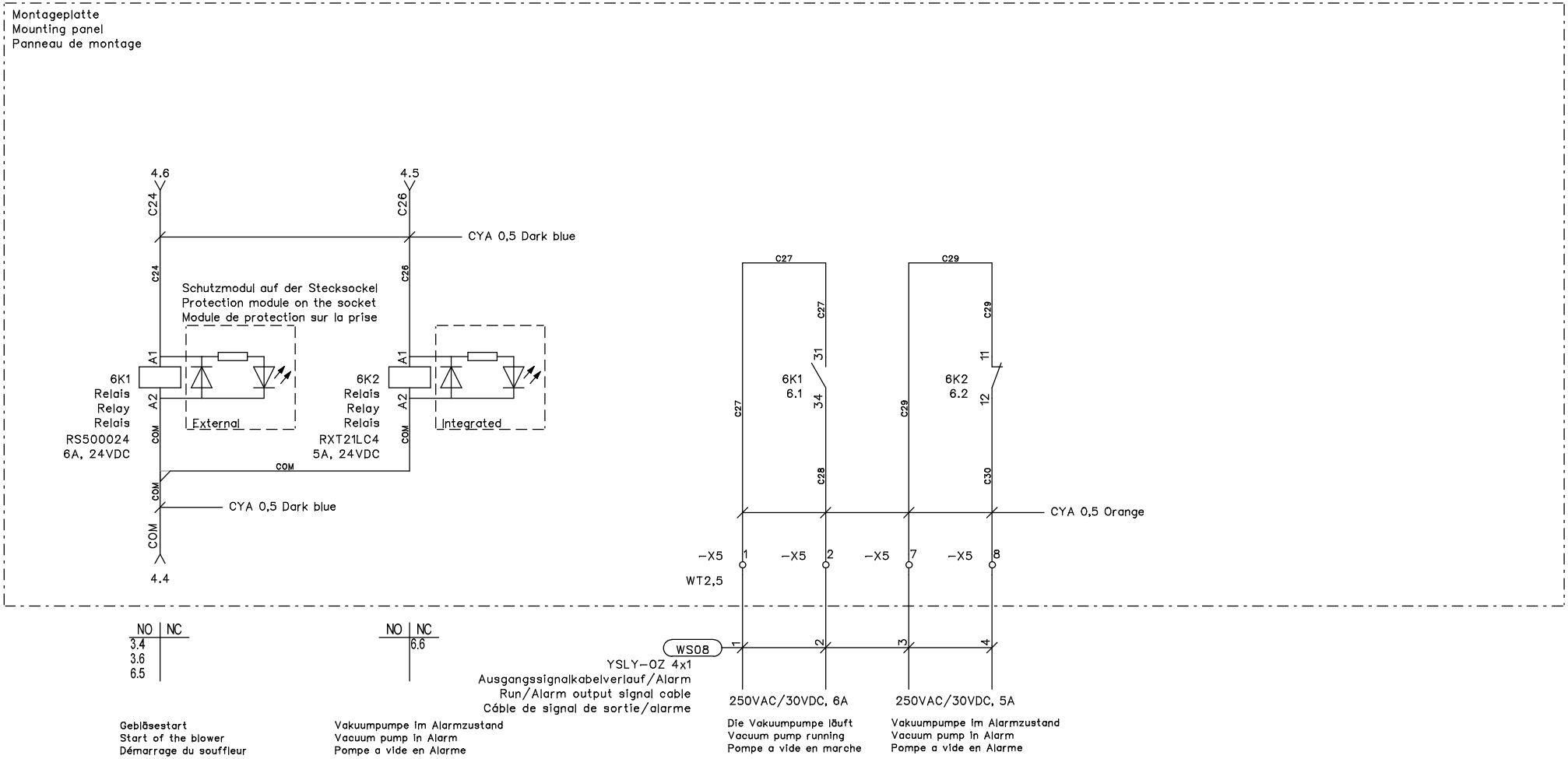

DESIGNED BY: ML	A	10.5.2024	Initial version	ML	Schaltplan Electrical schematics Schéma électriques	TYR Blower Relais und digitale ausgänge Relay and digital outputs Sorties relais et numériques
CHECKED: DK	B	11.9.2024	6K2 description, b/w ver.	ML		SHEET 6 ◀5 7▶
DATE OF CREATION: 10.5.2024	INDEX	DATE	MODIFICATION	DES.	DOCUMENT No: AR100152	Software SEE V8R1

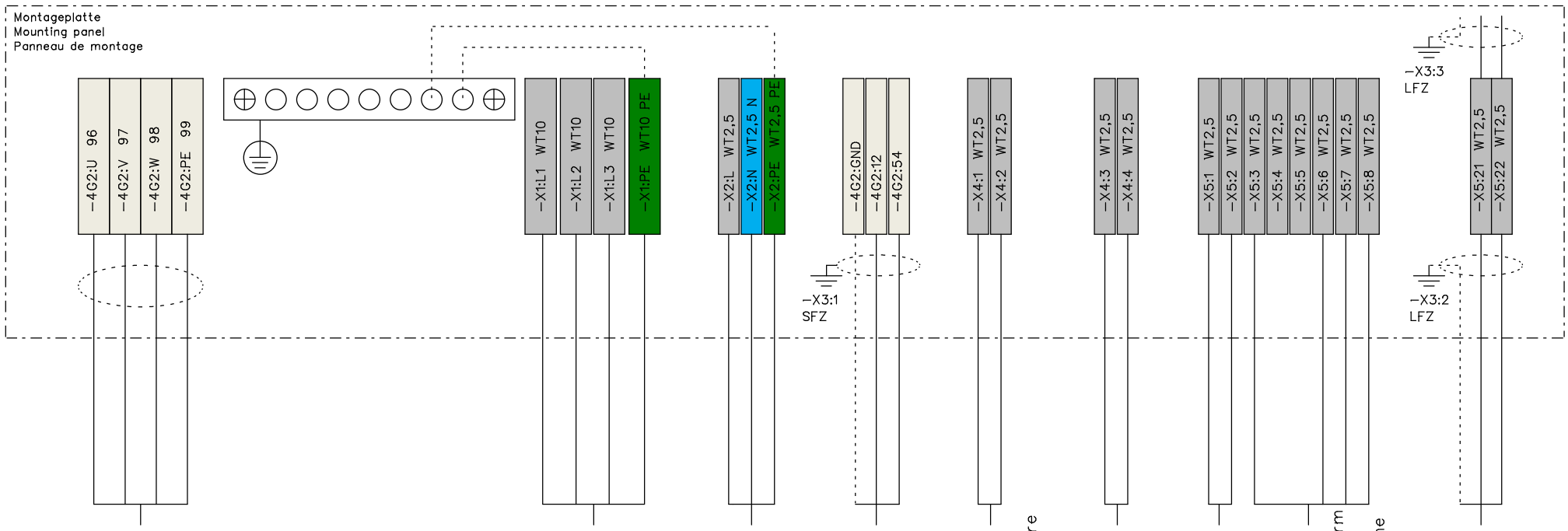

-WL02
YSLCY 4x6
Motorstromkabel
Motor power cable
Câble d'alimentation du moteur

-WL01
CYKY 4x6
Stromkabel
Power cable
Câble d'alimentation

-WL03
H05RR-F 3x1,5
Gebläseventilator
Blower fan
Ventilateur

-WS02
PUR 4x0,34
Drucksensorkabel
Pressure sensor cable
Câble du capteur de pression

-WS05
SIHF 2x0,34
Temperatursensorkabel
Temperature sensor cable
Câble du capteur de température

-WS06
YSLY-OZ 2x0,75
Thermistorkabel
Thermistor cable
Câble de thermistance

-WS07
YSLY-OZ 2x1
Fernbedienungskabel
Remote control cable
Câble de télécommande

-WS08
YSLY-OZ 4x1
Ausgangssignalkabelverlauf/Alarm
Run/Alarm output signal cable
Câble de signal de sortie/alarme

-WS04
LIYCY 2x0,5
Fernbedienungskabel 0-10V
Remote control cable 0-10V
Câble de télécommande 0-10V

DESIGNED BY: ML	A	10.5.2024	Initial version	ML	Schaltplan Electrical schematics Schéma électriques	TYR Blower Anschlussklemmen Connection terminals Bornes de connexion
CHECKED: DK	B	11.9.2024	6K2 description, b/w ver.	ML		
DATE OF CREATION: 10.5.2024	INDEX	DATE	MODIFICATION	DES.	DOCUMENT No: AR100152	

SHEET 7 ◀6 8▶

Software SEE V8R1

Stahlblechschrank Rittal AX 1059.000 mit den Maßen 800x600x400
Abgänge von unten
Sheet steel box Rittal AX 1059.000 with dimensions 800x600x400
Outlets from below
Coffre en tôle d'acier Rittal AX 1059.000 avec dimensions 800x600x400 Sorties par le bas

PG21 PG21 8xPG11

Schranksockel mit den Abmessungen 600x600x400
Switchboard base with dimensions 600x600x400
Base de tableau de dimensions 600x600x400

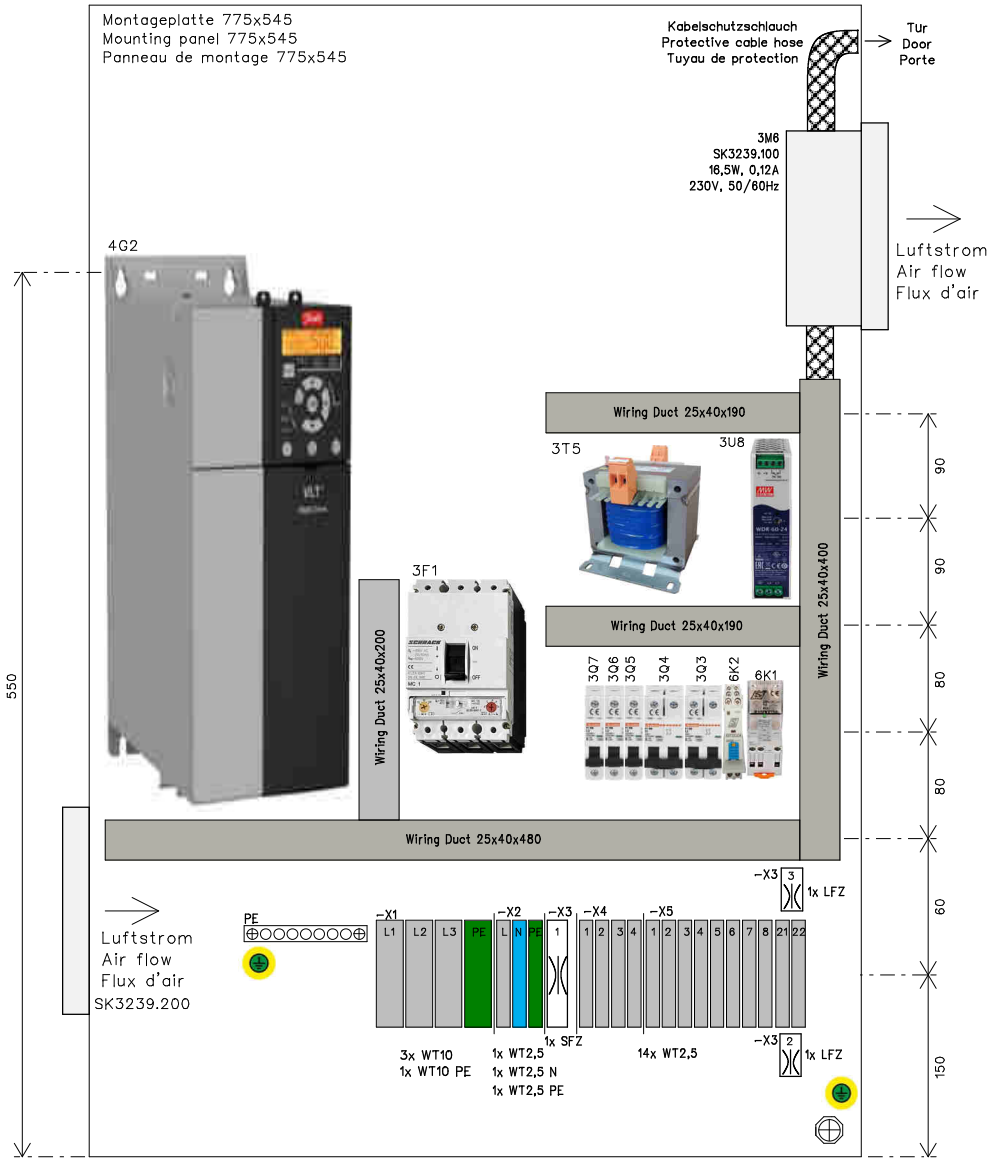

DESIGNED BY: ML	A	10.5.2024	Initial version	ML	Schaltplan Electrical schematics Schéma électriques	TYR Blower Dimensionale ansicht Dimensional view Vue dimensionnelle
CHECKED: DK	B	11.9.2024	6K2 description, b/w ver.	ML		
DATE OF CREATION: 10.5.2024	INDEX	DATE	MODIFICATION	DES.	DOCUMENT No: AR100152	SHEET 8 ◀7 9▶

Software SEE V8R1

Produktliste / List of Products / Liste des produits

Product (-)	Sheet	Cell	Description	Type
3F1	3	1	Hauptschalter,Hauptsicherung / Main switch,Circuit breaker / Interrupteur principal,Disjoncteur principal	MC150131, 440V, 40–50A, SCHRACK
3Q3	3	3	Circuit breaker / Leistungsschalter / Disjoncteur	P1MB2PC02, C2A, LOVATO
3Q4	3	4	Circuit breaker / Leistungsschalter / Disjoncteur	P1MB2PC01, C1A, LOVATO
3Q5	3	5	Circuit breaker / Leistungsschalter / Disjoncteur	P1MB1PC02, C2A, LOVATO
3Q6	3	6	Circuit breaker / Leistungsschalter / Disjoncteur	P1MB1PC02, C2A, LOVATO
3Q7	3	7	Circuit breaker / Leistungsschalter / Disjoncteur	P1MB1PC02, C2A, LOVATO
3T5	3	5	Transformator / Transformer / Transformateur	LP824040, SCHRACK
3U6	3	6	Stromversorgung / Power supply / Source de courant	WDR–60–24, MEAN WELL
3M6	3	6	Schaltschranklufter / Switchboard fan / Ventilateur de tableau	SK3239.100, 16,5W, 0,12A, 50/60Hz, RITTAL
3A8	3	8	HMI AECON	AECON, ARDAT Systems, EN/DE
3R8	3	8	Widerstand / Resistor / Résistance	120 ohm
4G2	4	2	Frequenzumwandler / Frequency converter / Convertisseur de fréquence	FC280P15K, 15kW, 380–480V, DANFOSS
5B1	5	1	Ansaugluftdrucksensor / Inlet air pressure sensor / Capteur de pression d'air d'admission	–100–0kPa/4–20mA, 7–33VDC, 528 HUBA
5B3	5	3	Temperatursensor / Temperature sensor / Capteur de température	TSB 06–35, 140°C, Sensit
5B5	5	5	Thermistor / Thermistor / Thermistance	3PTC
5S7	5	7	Not–Aus / Emergency stop / Arrét d'urgence	PPFN1R4N, GIOVANZANA
6K1	6	1	Relais / Relay / Relais	RS500024, 6A, 24VDC, SCHRACK
6K2	6	2	Relais / Relay / Relais	RXT21LC4, 5A, 24VDC, SCHRACK

Klemmenlist / List of terminals / Liste des bornes -X1

Product (-)	Terminal	Type	Sheet	Cell	Comment
-X1:L1	L1	WT10	3	1	
-X1:L2	L2	WT10	3	1	
-X1:L3	L3	WT10	3	1	
-X1:PE	PE	WT10 PE	3	2	

DESIGNED BY: ML	A	10.5.2024	Initial version	ML	Schaltplan Electrical schematics Schéma électriques
CHECKED: DK	B	11.9.2024	6K2 description, b/w ver.	ML	
DATE OF CREATION: 10.5.2024	INDEX	DATE	MODIFICATION	DES.	DOCUMENT No: AR100152

TYR Blower

Klemmenlist
List of terminals
Liste des bornes

SHEET 10

◀9 11▶

Software SEE V8R1

Klemmenlist / List of terminals / Liste des bornes -X2

Product (-)	Terminal	Type	Sheet	Cell	Comment
-X2:L	L	WT2,5	3	4	
-X2:N	N	WT2,5 N	3	4	
-X2:PE	PE	WT2,5 PE	3	4	

DESIGNED BY: ML	A	10.5.2024	Initial version	ML	Schaltplan Electrical schematics Schéma électriques	TYR Blower Klemmenlist List of terminals Liste des bornes	SHEET 11 ◀10 12▶
CHECKED: DK	B	11.9.2024	6K2 description, b/w ver.	ML			
DATE OF CREATION: 10.5.2024	INDEX	DATE	MODIFICATION	DES.	DOCUMENT No: AR100152		Software SEE V8R1

Klemmenlist / List of terminals / Liste des bornes -X3

Product (-)	Terminal	Type	Sheet	Cell	Comment
–X3:1	1	SFZ	5	1	
–X3:2	2	LFZ	5	8	
–X3:3	3	LFZ	5	8	

DESIGNED BY: ML	A	10.5.2024	Initial version	ML	Schaltplan Electrical schematics Schéma électriques
CHECKED: DK	B	11.9.2024	6K2 description, b/w ver.	ML	
DATE OF CREATION: 10.5.2024	INDEX	DATE	MODIFICATION	DES.	DOCUMENT No: AR100152

TYR Blower

Klemmenlist
List of terminals
Liste des bornes

SHEET 12
◀11 13▶

Software SEE V8R1

Klemmenlist / List of terminals / Liste des bornes -X4

Product (-)	Terminal	Type	Sheet	Cell	Comment
-X4:1	1	WT2,5	5	3	
-X4:2	2	WT2,5	5	3	
-X4:3	3	WT2,5	5	5	
-X4:4	4	WT2,5	5	5	

DESIGNED BY: ML	A	10.5.2024	Initial version	ML	Schaltplan Electrical schematics Schéma électriques
CHECKED: DK	B	11.9.2024	6K2 description, b/w ver.	ML	
DATE OF CREATION: 10.5.2024	INDEX	DATE	MODIFICATION	DES.	DOCUMENT No: AR100152

TYR Blower

Klemmenlist
List of terminals
Liste des bornes

SHEET 13
◀12 14▶

Software SEE V8R1

Klemmenlist / List of terminals / Liste des bornes -X5

Product (-)	Terminal	Type	Sheet	Cell	Comment
–X5:1	1	WT2,5	6	4	
–X5:2	2	WT2,5	6	5	
–X5:3	3	WT2,5	5	7	
–X5:4	4	WT2,5	5	7	
–X5:5	5	WT2,5	5	7	
–X5:6	6	WT2,5	5	7	
–X5:7	7	WT2,5	6	5	
–X5:8	8	WT2,5	6	6	
–X5:21	21	WT2,5	6	6	
–X5:22	22	WT2,5	6	6	

Liste der Kabel / List of Cables / Liste des câbles

Cablename (-)	Description	Connection 1	Connection 2	Sheet	Cell
WL01	Stromkabel / Power cable / Câble d'alimentation	FC1	-X1	3	1
WL02	Motorkabel / Motor cable / Câble moteur	4G2	4M2	4	2
WL03	Lufterkabel / Fan cable / Câble du ventilateur	-X2	3M4	3	4
WS01	RS485 cable	3A8	4G2	3	8
WS02	Drucksensorkabel / Pressure sensor cable / Câble du capteur de pression	4G2	5B1	5	1
WS03	Fernbedienungskabel 0-10V / Remote control cable 0-10V / Câble de télécommande 0-10V	4G2	-X5	5	8
WS04	Fernbedienungskabel 0-10V / Remote control cable 0-10V / Câble de télécommande 0-10V	-X5	Fernbedienung/Remote control/ Télécommande 0-10V	5	8
WS05	Temperatursensorkabel / Temperature sensor cable / Câble du capteur de température	-X4	5B3	5	3
WS06	Thermistorkabel / Thermistor cable / Câble de thermistance	-X4	5B5	5	5
WS07	Fernbedienungskabel / Remote control cable / Câble de télécommande	-X5	Fernbedienung/Remote/ Télécommande START/STOP	5	7
WS08	Ausgangssignalkabelverlauf/Alarm / Run/Alarm output signal cable / Câble de signal de sortie/alarme	-X5	Digitale ausgänge/Digital outputs/Sorties numériques	6	4

BUSCH

DESIGNED BY: ML
CHECKED: DK
DATE OF CREATION: 10.5.2024

INDEX	DATE	MODIFICATION	DES.
A	10.5.2024	Initial version	ML
B	11.9.2024	6K2 description, b/w ver.	ML

Schaltplan
Electrical schematics
Schéma électriques

DOCUMENT No: AR100152

TYR Blower
Liste der Kabel
List of Cables
Liste des câbles

SHEET 15
14 16

Software SEE V8R1

Drahtliste / Wire list / Liste des fils

No	From	To	Type	Colour	Square
L1.1	-X1:L1	3F1:1	H07 V-K 1x6. Black	Black	6
L2.1	-X1:L2	3F1:3	H07 V-K 1x6. Black	Black	6
L3.1	-X1:L3	3F1:5	H07 V-K 1x6. Black	Black	6
L1.2	3F1:2	4G2:91	H07 V-K 1x6. Black	Black	6
L2.2	3F1:4	4G2:92	H07 V-K 1x6. Black	Black	6
L3.2	3F1:6	4G2:93	H07 V-K 1x6. Black	Black	6
PE	-X1:PE	XPE1:PE	H07 V-K 1x6. Green yelow	Green yelow	6
PE	XPE1:PE	XPE2:PE	H07 V-K 1x6. Green yelow	Green yelow	6
PE	XPE1:PE	XPE3:PE	H07 V-K 1x6. Green yelow	Green yelow	6
PE	XPE1:PE	4G2:95	H07 V-K 1x6. Green yelow	Green yelow	6
PE	XPE1:PE	-X2:PE	H07 V-K 1x1. Green yelow	Green yelow	1
PE	XPE1:PE	3T5:N	H07 V-K 1x1. Green yelow	Green yelow	1
PE	XPE1:PE	3U6:V-	H07 V-K 1x1,5. Green yelow	Green yelow	1
PE	XPE1:PE	3A8:PE	H07 V-K 1x1. Green yelow	Green yelow	1
PE	XPE1:PE	3U6:PE	H07 V-K 1x1,5. Green yelow	Green yelow	1,5
PE	-X2:PE	3M6:PE	H07 V-K 1x1. Green yelow	Green yelow	1
N	3T5:N	-X2:N	H07 V-K 1x1. Blue	Blue	1
N	3T5:N	3M6:N	H07 V-K 1x1. Blue	Blue	1
V-	3U6:V-	3A8:N	H07 V-K 1x0,5. Dark blue	Dark blue	0,5
C1	3F1:2	3Q3:1	H07 V-K 1x1,5. Black	Black	1,5
C2	3F1:4	3Q3:3	H07 V-K 1x1,5. Black	Black	1,5
C3	3Q3:1	3Q4:1	H07 V-K 1x1,5. Black	Black	1,5
C4	3Q3:3	3Q4:3	H07 V-K 1x1,5. Black	Black	1,5
C5	3Q3:2	3T5:L1	H07 V-K 1x1,5. Black	Black	1,5
C6	3Q3:4	3T5:L2	H07 V-K 1x1,5. Black	Black	1,5
C7	3Q4:2	3U6:L1	H07 V-K 1x1,5. Black	Black	1,5
C8	3Q4:4	3U6:L2	H07 V-K 1x1,5. Black	Black	1,5
C9	3T5:L	3Q5:1	H07 V-K 1x1. Black	Black	1
C10	3T5:L	3Q6:1	H07 V-K 1x1. Black	Black	1

Drahtliste / Wire list / Liste des fils

No	From	To	Type	Colour	Square
C11	3Q5:2	6K1:11	H07 V-K 1x1. Black	Black	1
C12	6K1:14	-X2:L	H07 V-K 1x1. Black	Black	1
C13	3Q6:2	6K1:21	H07 V-K 1x1. Black	Black	1
C14	6K1:24	3M6:L	H07 V-K 1x1. Black	Black	1
C15	3U6:V+	3Q7:1	H07 V-K 1x0,5. Dark blue	Dark blue	0,5
C16	3Q7:2	3A8:L	H07 V-K 1x0,5. Dark blue	Dark blue	0,5
C17	4G2:13	4G2:01	H07 V-K 1x0,5. Dark blue	Dark blue	0,5
C18	4G2:01	-X4:1	H07 V-K 1x0,5. Dark blue	Drak blue	0,5
C18	-X4:1	-X4:3	H07 V-K 1x0,5. Dark blue	Drak blue	0,5
C19	-X4:2	4G2:19	H07 V-K 1x0,5. Dark blue	Dark blue	0,5
C20	-X4:3	-X5:3	H07 V-K 1x0,5. Dark blue	Dark blue	0,5
C21	-X5:3	5S7:1	H07 V-K 1x0,5. Dark blue	Dark blue	0,5
C22	5S7:2	4G2:37	H07 V-K 1x0,5. Dark blue	Dark blue	0,5
C22	4G2:37	4G2:38	H07 V-K 1x0,5. Dark blue	Dark blue	0,5
C23	4G2:18	-X5:6	H07 V-K 1x0,5. Dark blue	Dark blue	0,5
C24	4G2:27	6K1:A1	H07 V-K 1x0,5. Dark blue	Dark blue	0,5
C25	-X4:4	4G2:33	H07 V-K 1x0,5. Dark blue	Dark blue	0,5
C26	4G2:02	6K2:A1	H07 V-K 1x0,5. Dark blue	Dark blue	0,5
C27	6K1:31	-X5:1	H07 V-K 1x0,5. Orange	Orange	0,5
C28	6K1:34	-X5:2	H07 V-K 1x0,5. Orange	Orange	0,5
C29	6K2:11	-X5:7	H07 V-K 1x0,5. Orange	Orange	0,5
C30	6K2:12	-X5:8	H07 V-K 1x0,5. Orange	Orange	0,5
COM	4G2:55	6K1:A2	H07 V-K 1x0,5. Dark blue	Dark blue	0,5
COM	6K1:A2	6K2:A2	H07 V-K 1x0,5. Dark blue	Dark blue	0,5